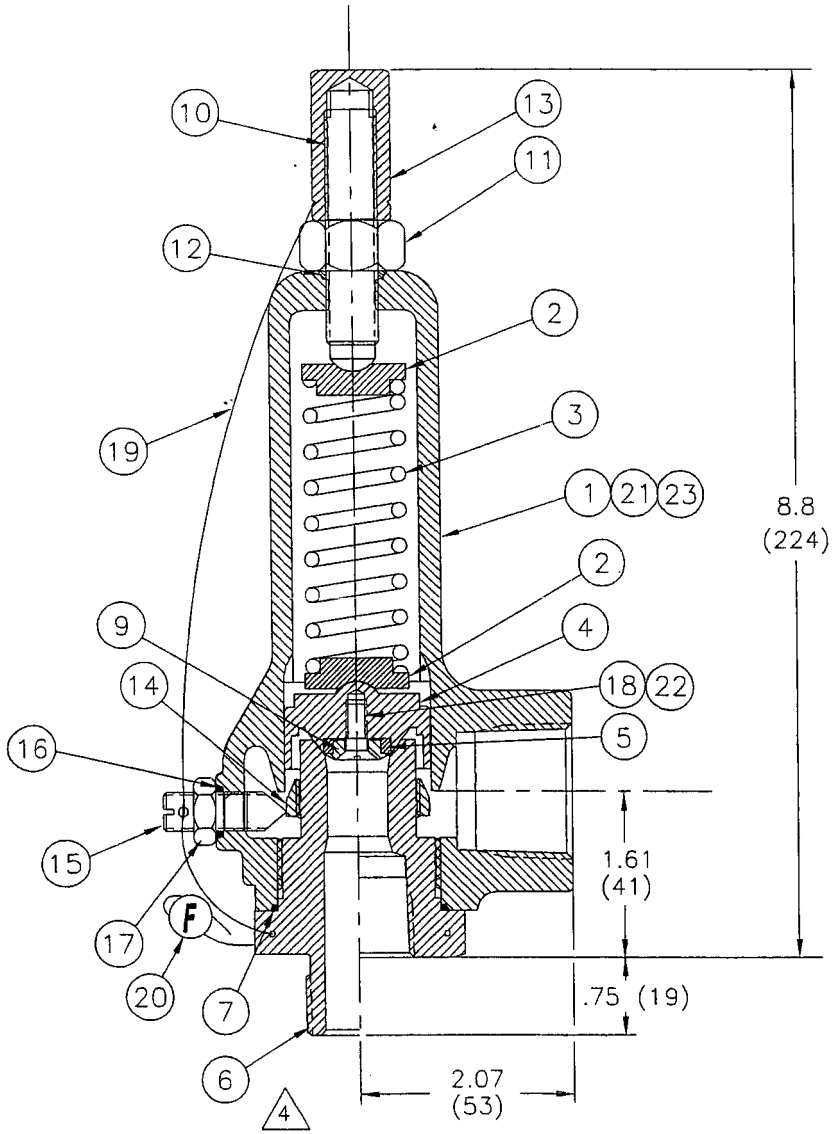

ITEM NO	PART NAME	STANDARD MATERIALS		
		BRASS	CARBON STEEL (NACE)	STAINLESS STEEL (NACE)
1	BODY	SB-61	SA-351 CF8M	SA-351 CF8M
2	SPRING WASHER	ASTM B16	CS/PLATED (316 SS)	A479 316
3	SPRING	302/304/17-7 SS	302/304/17-7SS (INCONEL)	302/304/17-7SS (INCONEL)
4	SPINDLE	ASTM B16	A479 316	A479 316
5	SEAT	PLASTIC	PLASTIC	PLASTIC
6	BUSHING	ASTM B16	SA-479 316/316L	SA-479 316/316L
7	BUSHING SEAL	TEFLON	TEFLON	TEFLON
9	RETAINER	ASTM B16	A479 316	A479 316
10	PRESSURE ADJ SCREW	ASTM B16	CS/PLATED (316 SS)	316 SS
11	LOCK NUT, PA SCREW	STAINLESS STEEL	STAINLESS STEEL	STAINLESS STEEL
12	SEAL, PA SCREW	TEFLON	TEFLON	TEFLON
13	CAP, PA SCREW	ASTM B16	316 SS	316 SS
14	BLOWDOWN RING	ASTM B16	316 SS	316 SS
15	LOCK SCREW, BD	MONEL	316 SS	316 SS
16	SEAL, BD SCREW	TEFLON	TEFLON	TEFLON
17	LOCK NUT, BD SCREW	STAINLESS STEEL	STAINLESS STEEL	STAINLESS STEEL
18	RETAINER SCREW	MONEL	316 SS	316 SS
19	LOCKWIRE	STAINLESS STEEL	STAINLESS STEEL	STAINLESS STEEL
20	SEAL	LEAD	LEAD	LEAD
21	NAMEPLATE	SS OR ALUM.	SS OR ALUM.	SS OR ALUM.
22	HELICOIL	304 SS	304 SS (INCONEL)	304SS (INCONEL)
23	DRIVE PINS	STAINLESS STEEL	STAINLESS STEEL	STAINLESS STEEL

CUSTOMER NAME – _____

CUSTOMER P.O. NO. – _____

SERIAL NO. – _____

TAG NO. – _____

ASSY NO.(See Note) – _____

SET PRESSURE – _____ psig barg CAPACITY – _____ scfm Nm3/hr

NOTES – _____

PREPARED BY: DATE:

AUTHORIZED REP:

SOFT GOODS		
MATERIAL	SEAT	SEALS
TEFLON (PTFE)		X
VESPEL		
KEL-F (PCTFE)		
EKONOL/PTFE		

	SIZE	CONNECTIONS		
		FNPT	MNPT	SPECIAL
INLET				
OUTLET	1"	X		

4

ORIFICE SIZE / AREA, in2 (cm2)		MAX. PRESSURE, psig (barg)	
		BRASS	STEEL
-4	.065 (0.42)	3500 (241)	4921 (339)
-6	.149 (.96)	2900 (200)	2900 (200)
-8	.261 (1.68)	1125 (77)	1125 (77)

Notes:

1. Determine Assembly No. from F80 Catalog.
2. Dimensions are in inches and (mm). Connection tolerances are ± 1/16" (2 mm).
3. Weight = 4.8 lbs (2.2 kg).
4. 1/2"-1" NPT for F84-4; 3/4" or 1" NPT for F84-6, -8.

FLOW SAFE Inc

SUBMITTAL DRAWING, F84

-4, -6, & -8 ORIFICES (B Body)

DRAWING NO. F84-468-B

SCALE: NTS | REV: K | BY: ARM | DATE: 24-June-08 | SHEET 1 OF 1